Roller Chain

BRITISH STANDARD - SIMPLEX

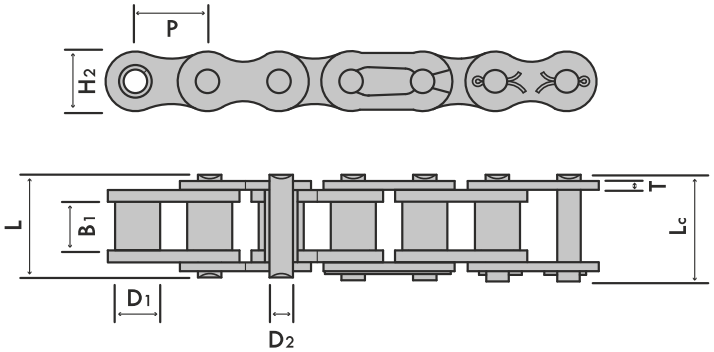

ISO CHAIN NO.	Pitch		Roller Diameter	Width between inner plates	Pin dia meter	Pin length		Inner plate depth	Plate thick-ness	Ultimate tensile strength	Average tensile strength	Weight per meter
	P		D1 max	B1 min	D2 max	L max	Lc max	H2 max	T max	Q min	Q0	q
	inch	mm	mm	mm	mm	mm	mm	mm	mm	kN/LB	kN	kg/m
04B-1	1/4"	6.000	4.00	2.80	1.85	6.80	7.8	5.00	0.60	3.0/682	3.2	0.11
05B-1	5/16"	8.000	5.00	3.00	2.31	8.20	8.9	7.10	0.80	5.0/1136	5.9	0.20
06B-1	3/8"	9.525	6.35	5.72	3.28	13.15	14.1	8.20	1.30	9.0/2045	10.4	0.41
08B-1	1/2"	12.700	8.51	7.75	4.45	16.70	18.2	11.80	1.60	18.0/4091	19.4	0.69
10B-1	5/8"	15.875	10.16	9.65	5.08	19.50	20.9	14.70	1.70	22.4/5091	27.5	0.93
12B-1	3/4"	19.050	12.07	11.68	5.72	22.50	24.2	16.00	1.85	29.0/6591	32.2	1.15
16B-1	1"	25.400	15.88	17.02	8.28	26.10	37.4	21.00	4.15/3.1	60.0/13636	72.8	2.71
20B-1	1 1/4"	31.750	19.05	19.56	10.19	41.30	45.0	26.40	4.5/3.5	95.0/21591	106.7	3.70
24B-1	1 1/2"	38.100	25.40	25.40	14.63	53.40	57.8	33.20	6.0/4.8	160.0/36364	178.0	7.10
28B-1	1 3/4"	44.450	27.94	30.99	15.90	65.10	69.5	36.70	7.5/6.0	200.0/45455	22.0	8.50
32B-1	2"	50.800	29.21	30.99	17.81	66.00	71.0	42.00	7.0/6.0	250.0/56818	277.5	10.25

BRITISH STANDARD - DUPLEX

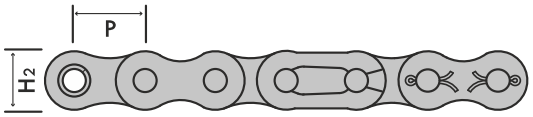

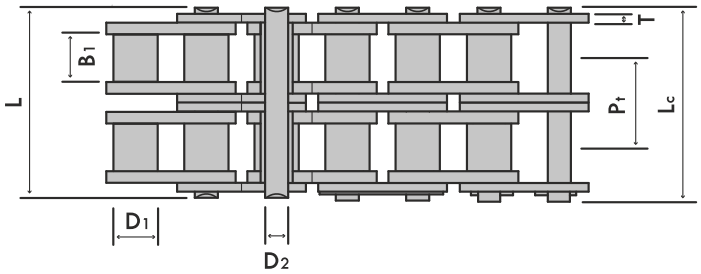

ISO CHAIN NO.	Pitch		Roller dia meter	Width between inner plates	Pin dia meter	Pin length		Inner plate depth	Plate thick-ness	Trans-verse pitch	Ultimate tensile strength	Average tensile strength	Weight per meter
	P		D1 max	B1 min	D2 max	L max	Lc max	H2 max	T max	Pt	Q min	Q0	q
	inch	mm	mm	mm	mm	mm	mm	mm	mm	mm	kN/LB	kN	kg/m
05B-2	5/16"	8.000	5.00	3.00	2.31	13.9	14.5	7.10	0.80	5.64	7.8/1773	10.2	0.33
06B-2	3/8"	9.525	6.35	5.72	3.28	23.4	24.4	8.20	1.30	10.24	16.9/3841	18.7	0.77
08B-2	1/2"	12.700	8.51	7.75	4.45	31.2	32.2	11.80	1.60	13.92	32.0/7232	38.7	1.34
10B-2	5/8"	15.875	10.16	9.65	5.08	36.1	37.5	14.70	1.70	16.59	44.5/10114	56.2	1.84
12B-2	3/4"	19.050	12.07	11.68	5.72	42.0	43.6	16.00	1.85	19.46	57.8/13136	66.1	2.31
16B-2	1"	25.400	15.88	17.02	8.28	68.0	69.3	21.00	4.15/3.1	31.88	106.0/24091	133.0	5.42
20B-2	1 1/4"	31.750	19.05	19.56	10.19	77.8	81.5	26.40	4.5/3.5	36.45	170.0/38636	211.2	7.20
24B-2	1 1/2"	38.100	25.40	25.40	14.63	101.7	106.2	33.20	6.0/4.8	48.36	28.0/63636	319.2	13.40
28B-2	1 3/4"	44.450	27.94	30.99	15.90	124.6	129.1	36.70	7.5/6.0	59.56	360.0/81818	406.8	16.60
32B-2	2"	50.800	29.21	30.99	17.81	124.6	129.6	42.00	7.0/6.0	58.55	450.0/102273	508.5	21.00

BRITISH STANDARD - TRIPLEX

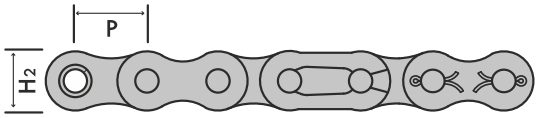

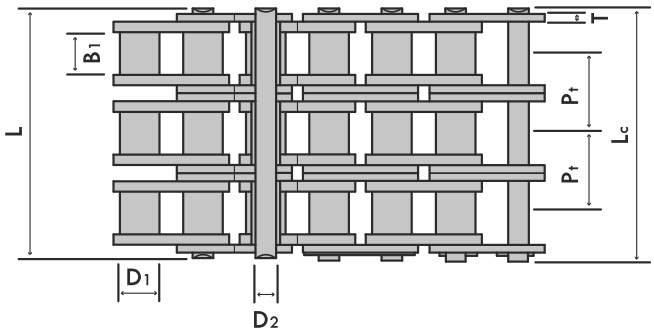

ISO CHAIN NO.	Pitch		Roller dia meter	Width between inner plates	Pin dia meter	Pin length		Inner plate depth	Plate thickness	Trans-verse pitch	Ultimate tensile strength	Average tensile strength	Weight per meter
	P		D1 max	B1 min	D2 max	L max	Lc max	H2 max	T max	Pt	Q min	Q0	q
	inch	mm	mm	mm	mm	mm	mm	mm	mm	mm	kN/LB	kN	kg/m
05B-3	5/16"	8.000	5.00	3.00	2.31	19.5	20.2	7.10	0.80	5.64	11.1/2523	13.8	0.48
06B-3	3/8"	9.525	6.35	5.72	3.28	33.5	34.6	8.20	1.30	10.24	24.9/5659	30.1	1.16
08B-3	1/2"	12.700	8.51	7.75	4.45	45.1	46.1	11.80	1.60	13.92	47.5/10795	57.8	2.03
10B-3	5/8"	15.875	10.16	9.65	5.08	52.7	54.1	14.70	1.70	16.59	66.7/15159	84.5	2.77
12B-3	3/4"	19.050	12.07	11.68	5.72	61.5	63.1	16.00	1.85	19.46	86.7/19705	101.8	3.46
16B-3	1"	25.400	15.88	17.02	8.28	99.8	101.2	21.00	4.15/3.1	31.88	160.0/36364	203.7	8.13
20B-3	1 1/4"	31.750	19.05	19.56	10.19	114.2	117.9	26.40	4.5/3.5	36.45	250.0/56818	290.0	10.82
24B-3	1 1/2"	38.100	25.40	25.40	14.63	150.1	154.6	33.20	6.0/4.8	48.36	425.0/96591	493.0	20.10
28B-3	1 3/4"	44.450	27.94	30.99	15.90	184.2	188.7	36.70	7.5/6.00	59.56	530.0/120454	609.5	24.92
32B-3	2"	50.800	29.21	30.99	17.81	183.2	188.2	42.00	7.0/6.0	58.55	670.0/152273	770.5	31.56

AMERICAN STANDARD - SIMPLEX

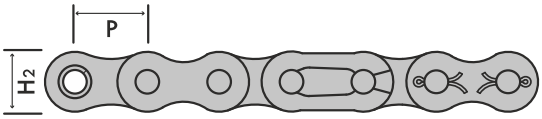

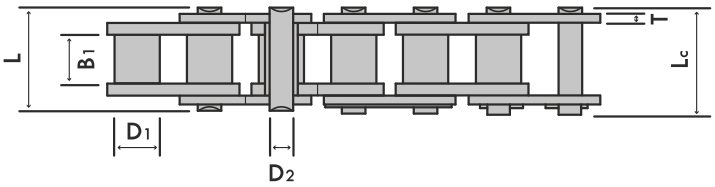

ANSI CHAIN NO.	Pitch		Roller Diameter	Width between inner plates	Pin dia meter	Pin length		Inner plate depth	Plate thickness	Ultimate tensile strength	Average tensile strength	Weight per meter
	P		D1 max	B1 min	D2 max	L max	Lc max	H2 max	T max	Q min	Q0	q
	inch	mm	mm	mm	mm	mm	mm	mm	mm	kN/LB	kN	kg/m
ASA 35-1	3/8"	9.525	5.08	4.77	3.58	12.40	13.17	9.00	1.30	7.90/1795	10.8	0.33
ASA 40-1	1/2'	12.700	7.95	7.85	3.96	16.60	17.80	12.00	1.50	14.10/3205	17.5	0.62
ASA 50-1	5/8"	15.875	10.16	9.40	5.08	20.70	22.20	15.09	2.03	22.20/5045	29.4	1.02
ASA 60-1	3/4"	19.050	11.91	12.57	5.94	25.90	27.70	18.00	2.42	31.80/7227	41.5	1.50
ASA 80-1	1"	25.400	15.88	15.75	7.92	32.70	35.00	24.00	3.25	56.70/12886	69.4	2.60
ASA 100-1	1 1/4"	31.750	19.05	18.90	9.53	40.40	44.70	30.00	4.00	88.50/20114	109.2	3.91
ASA 120-1	1 1/2"	38.100	22.23	25.22	11.10	50.30	54.30	35.70	4.80	127.00/28864	156.3	5.62
ASA 140-1	1 3/4"	44.450	25.40	25.22	12.70	54.40	59.00	41.00	5.60	172.40/39182	212.0	7.50
ASA 160-1	2"	50.800	28.58	31.55	14.27	64.60	69.60	47.80	6.40	226.80/51545	278.9	10.10

AMERICAN STANDARD - DUPLEX

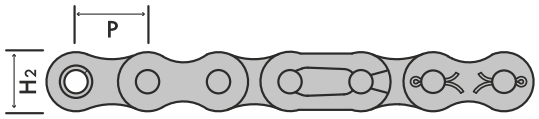

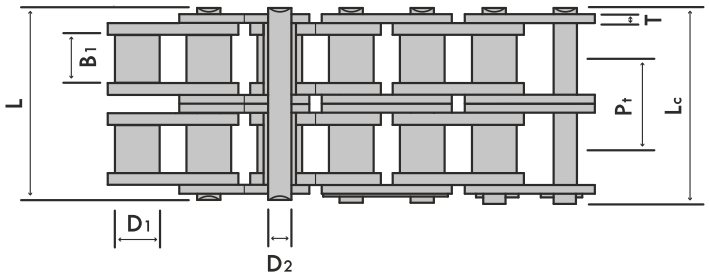

ANSI CHAIN NO.	Pitch		Roller dia meter	Width between inner plates	Pin dia meter	Pin length		Inner plate depth	Plate thick-ness	Trans-verse pitch	Ultimate tensile strength	Average tensile strength	Weight per meter
	P		D1 max	B1 min	D2 max	L max	Lc max	H2 max	T max	Pt	Q min	Q0	q
	inch	mm	mm	mm	mm	mm	mm	mm	mm	mm	kN/LB	kN	kg/m
ASA 35-2	3/8"	9.525	5.08	4.77	3.58	22.5	23.3	9.00	1.30	10.13	15.80/3591	19.7	0.63
ASA 40-2	1/2"	12.700	7.95	7.85	3.96	31.0	32.2	12.00	1.50	14.38	28.20/6409	35.9	1.12
ASA 50-2	5/8"	15.875	10.16	9.40	5.08	38.9	40.4	15.09	2.03	18.11	44.40/10091	58.1	2.00
ASA 60-2	3/4"	19.050	11.91	12.57	5.94	48.8	50.5	18.00	2.42	22.78	63.60/14455	82.1	2.92
ASA 80-2	1"	25.400	15.88	15.75	7.92	62.7	64.3	24.00	3.25	29.29	113.40/25773	141.8	5.15
ASA 100-2	1 1/4"	31.750	19.05	18.90	9.53	76.4	80.5	30.00	4.00	35.76	177.00/40227	219.4	7.80
ASA 120-2	1 1/2"	38.100	22.23	25.22	11.10	95.8	99.7	35.70	4.80	45.44	254.00/57727	314.9	11.70
ASA 140-2	1 3/4"	44.450	25.40	25.22	12.70	103.3	107.9	41.00	5.60	48.87	344.80/78364	427.5	15.14
ASA 160-2	2"	50.800	28.58	31.55	14.27	123.3	128.1	47.80	6.40	58.55	453.60/103091	562.4	20.14

AMERICAN STANDARD - TRIPLEX

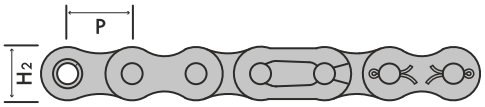

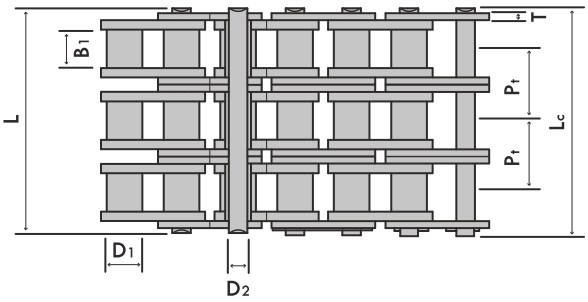

ANSI CHAIN NO.	Pitch		Roller dia meter	Width between inner plates	Pin dia meter	Pin length		Inner plate depth	Plate thickness	Trans-verse pitch	Ultimate tensile strength	Average tensile strength	Weight per meter
	P		D1 max	B1 min	D2 max	L max	Lc max	H2 max	T max	Pt	Q min	Q0	q
	inch	mm	mm	mm	mm	mm	mm	mm	mm	mm	kN/LB	kN	kg/m
ASA 35-2	3/8"	9.525	5.08	4.77	3.58	32.7	33.5	9.00	1.30	10.13	23.7/5386	28.6	1.05
ASA 40-2	1/2"	12.700	7.95	7.85	3.96	45.4	46.6	12.00	1.50	14.38	42.3/9614	50.0	1.90
ASA 50-2	5/8"	15.875	10.16	9.40	5.08	57.0	58.5	15.09	2.03	18.11	66.6/15136	77.8	3.09
ASA 60-2	3/4"	19.050	11.91	12.57	5.94	71.5	73.3	18.00	2.42	22.78	95.4/21682	111.1	4.54
ASA 80-2	1"	25.400	15.88	15.75	7.92	91.7	93.6	24.00	3.25	29.29	170.1/38659	198.4	7.89
ASA 100-2	1 1/4"	31.750	19.05	18.90	9.53	112.2	116.3	30.00	4.00	35.76	265.5/60341	309.6	11.77
ASA 120-2	1 1/2"	38.100	22.23	25.22	11.10	141.4	145.2	35.70	4.80	45.44	381.0/86591	437.2	17.53
ASA 140-2	1 3/4"	44.450	25.40	25.22	12.70	152.2	156.8	41.00	5.60	48.87	517.2/117545	593.3	22.20
ASA 160-2	2"	50.800	28.58	31.55	14.27	181.8	186.6	47.80	6.40	58.55	680.4/154636	780.6	30.02

AMERICAN STANDARD - HEAVY DUTY - SIMPLEX

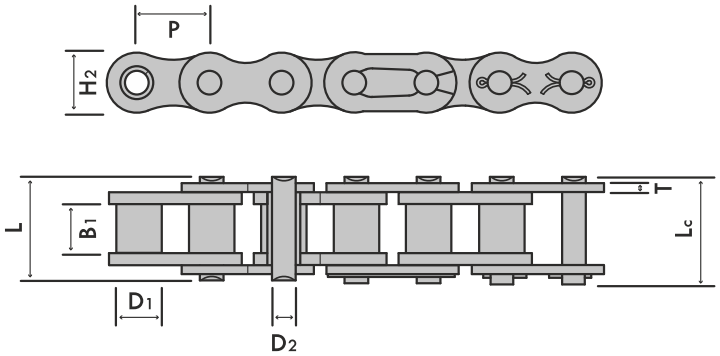

ANSI CHAIN NO.	Pitch		Roller Diameter	Width between inner plates	Pin dia meter	Pin length		Inner plate depth	Plate thickness	Ultimate tensile strength	Average tensile strength	Weight per meter
	P		D1 max	B1 min	D2 max	L max	Lc max	H2 max	T max	Q min	Q0	q
	inch	mm	mm	mm	mm	mm	mm	mm	mm	kN/LB	kN	kg/m
50 H -1	5/8”	15.875	10.16	9.40	5.08	22.1	23.4	15.09	2.42	22.2/5045	30.2	1.25
60 H -1	3/4”	19.050	11.91	12.57	5.94	29.2	31.0	18.00	3.25	31.8/7227	42.7	1.87
80 H -1	1”	25.400	15.88	15.75	7.92	36.2	37.7	24.00	4.00	56.7/12886	71.4	3.10
100 H -1	1 1/4”	31.750	19.05	18.90	9.53	43.6	46.9	30.00	4.80	88.5/20114	112.4	4.52
120 H -1	1 1/2”	38.100	22.23	25.22	11.10	53.5	57.5	35.70	5.60	127.0/28864	160.9	6.60
140 H -1	1 3/4”	44.450	25.40	25.22	12.70	57.6	62.2	41.00	6.40	172.4/39182	217.3	8.30
160 H -1	2”	50.800	28.58	31.55	14.27	68.2	73.0	47.80	7.20	226.8/51545	285.8	10.30

POWERDRIVE CHAIN BREAKERS

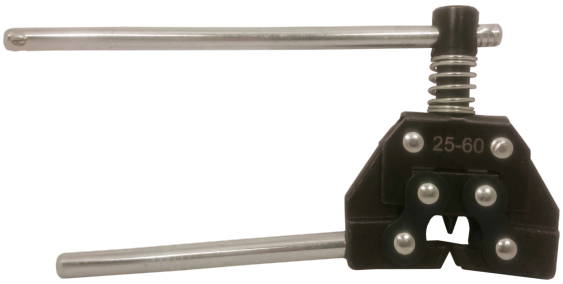

CB2560	CB60100
Able to break 1/4” - 3/4” pitch chain	Able to break 3/4” - 1 1/4” pitch chain

- An easy to use design which quickly and efficiently breaks roller chain
- Hardened parts leading to a longer life
- No additional force is required to break the roller chain
- Suitable for simplex and duplex roller chain